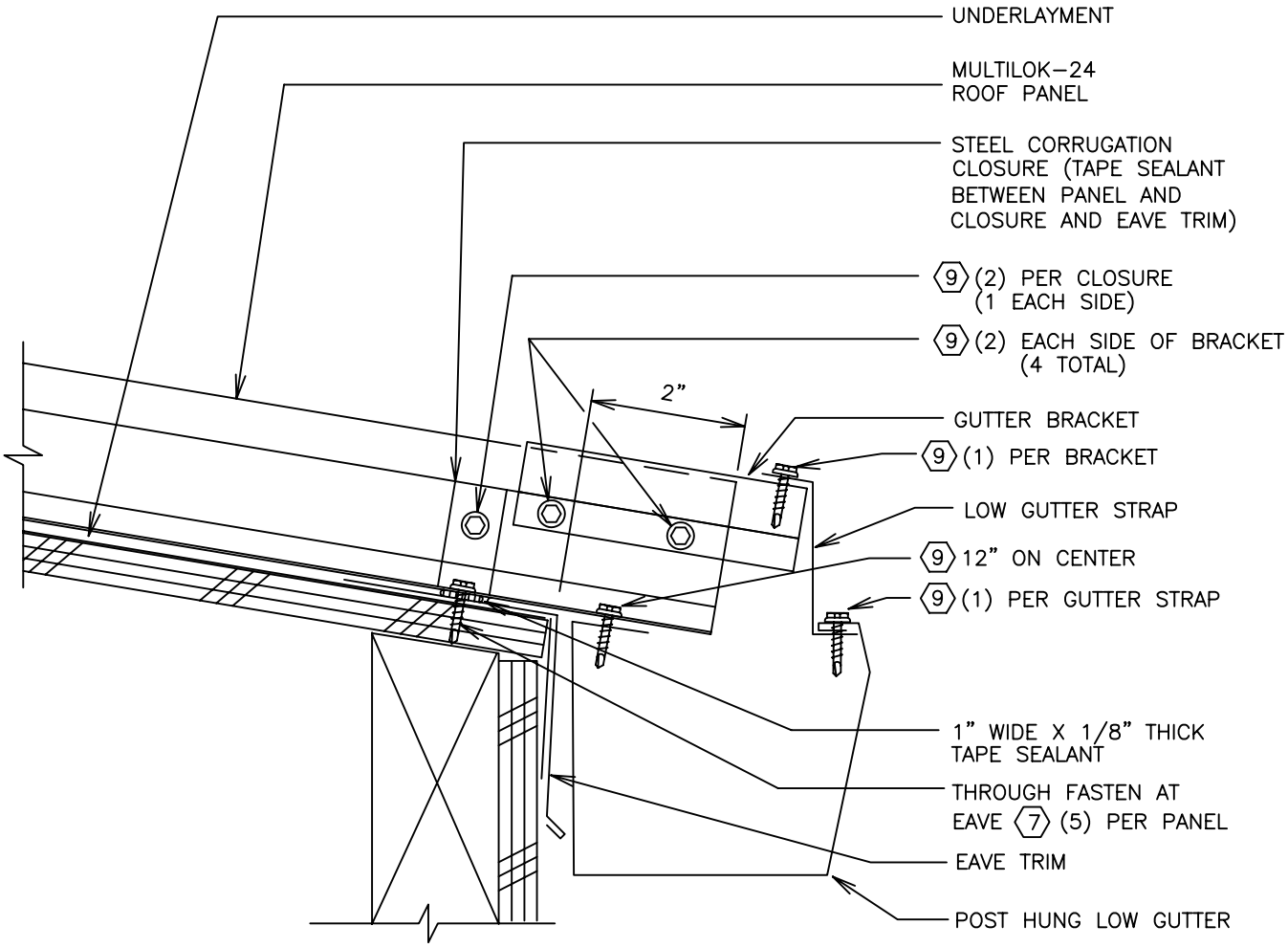

NOTES:
1. (1) 3 FASTENER REQUIRED TO SECURE STEEL CLOSURE (NOT SHOWN FOR CLARITY).

AEP SPAN
Engineered Solutions in Metal

MULTILOK-24

GUTTER
(POST-HUNG)

ML-09

REV. 11/13/07